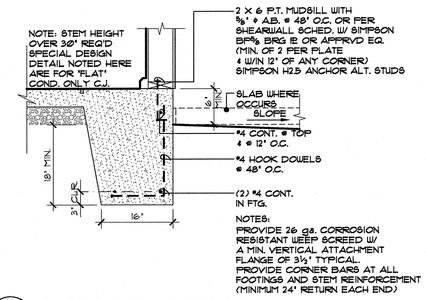

NOTES:
PROVIDE 26 ga. CORROSION RESISTANT WEEP SCREED W/ A MIN. VERTICAL ATTACHMENT FLANGE OF 3½" TYPICAL.
PROVIDE CORNER BARS AT ALL FOOTINGS AND STEM REINFORCEMENT (MINIMUM 24" RETURN EACH END)

PERIMETER FOUNDATION
MONOLITHIC SLAB
SCALE : 3/4" = 1'-0"

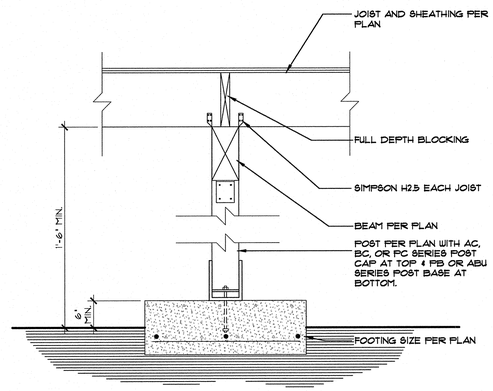

POST FTG. AT CRAWL SPACE
SCALE : N.T.S.

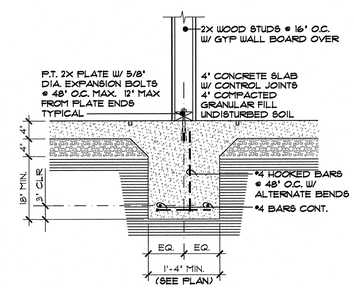

INTERIOR BEARING FOOTING
MONOLITHIC SLAB
SCALE : 3/4" = 1'-0"

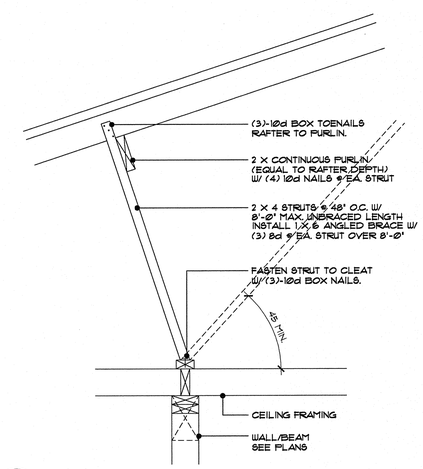

PURLIN
SCALE : 3/4" = 1'-0"

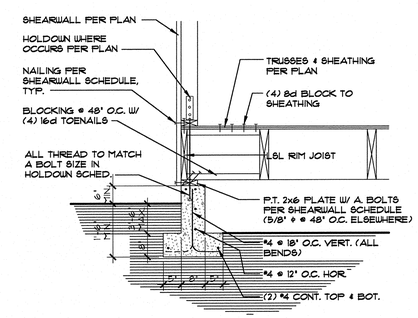

EXTERIOR NON-BEARING WALL
SCALE : 3/4" = 1'-0"

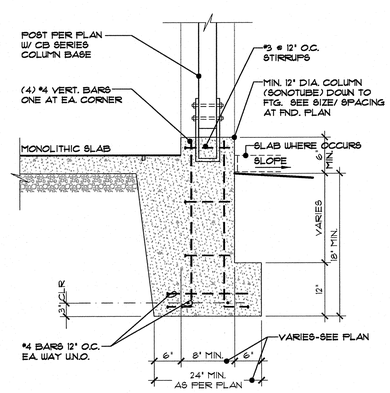

POST/COLUMN FOOTING
MONOLITHIC SLAB
SCALE : 3/4" = 1'-0"

COPYRIGHT © 2007 MICHAEL C. DAILY DESIGN CONSULTANTS, LLC

MICHAEL C. DAILY
DESIGN CONSULTANTS, LLC
"Home Designs For Southwestern Living"

These plans have been created by the Contractor, or on his or her behalf, for the purpose of obtaining a building permit in the jurisdiction in which the project is to be constructed. The Contractor represents that he or she is the owner of the copyright in these plans, or has the right to use and modify the plans for the purpose of obtaining a building permit in the jurisdiction in which the project is to be constructed. The Contractor represents that the plans do not violate any copyright, trademark, or other intellectual property right of any third party. The Contractor agrees to indemnify and hold Michael C. Daily Design Consultants, LLC harmless from any claim or lawsuit, including all costs and attorney's fees, that may be asserted or claimed against Michael C. Daily Design Consultants, LLC by any third party as a result of the use by the Contractor of these plans in the permitting process. A person does not become an owner of these plans nor gain any rights to the plans or to the art, ideas, concepts, designs, and specifications stated in these plans by paying for the plans. Ownership of the copyright has value. The contractor, therefore, must handle copies of the plans with care. The Contractor agrees to return all copies of the plans upon request by Michael C. Daily Design Consultants, LLC if the Contractor does not use the plans for the purpose of obtaining a building permit in the jurisdiction in which the project is to be constructed. The Contractor represents that he or she has the authority to return all copies of the plans upon request by Michael C. Daily Design Consultants, LLC. A person does not become an owner of these plans nor gain any rights to the plans or to the art.

MICHAEL C. DAILY DESIGN CONSULTANTS, LLC
9816 CUTTER'S POINT, SUITE 1 - CORPUS CHRISTI, TEXAS
(823) 936-6500 (823) 320-7423 (FAX) - PROFESSIONAL MEMBER, AIBD
Visit Our Website - MICHAELDAILY.COM

Dormitory Building-D1.dwg

MAIN FLOOR	1920 SQ. FT.	FOOTPRINT	2106 SQ. FT.
COVERED AREA	186 SQ. FT.		

PREPARED EXCLUSIVELY FOR:

Dormitory Building

PAPUA NEW GUINEA

Dormitory Building
D1

MICHAEL C. DAILY
DESIGN CONSULTANTS, LLC
"Home Designs For Southwestern Living"